Fach XG 195

105

SERVICE DATA
FILE NO. 110-337

TOSHIBA

STEREO RADIO CASSETTE RECORDER

RT-SF10

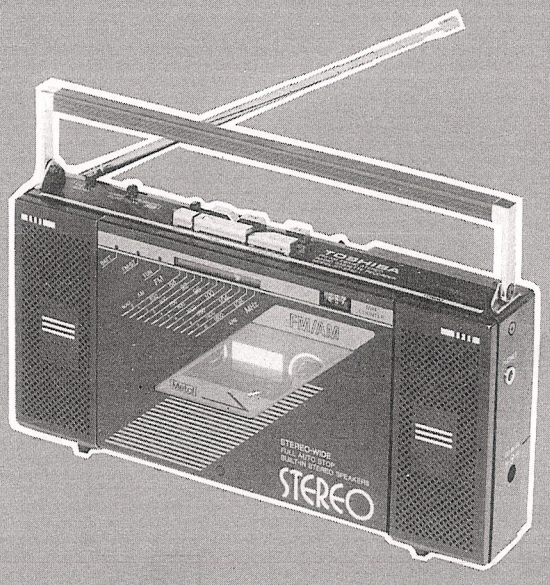

SPECIFICATIONS

Cassette Tape Used:	Normal: C-30, C-60, C-90, C-120 Metal: C-46, C-60, C-90
Tape Speed:	4.8 cm/s.
Track System:	Compact cassette stereo
Recording System:	AC bias
Erasing System:	Magnet erasure
Frequency Response:	60 Hz to 10 kHz (Normal) 60 Hz to 13 kHz (Metal)
Receiving Frequency:	FM: 88 MHz to 108 MHz AM: 526.5 kHz to 1606.5 kHz
Intermediate Frequency:	FM: 10.7 MHz AM: 455 kHz TA, 460 kHz YY
Antenna:	FM: Telescopic antenna (A cord antenna is also used.) AM: Ferrite-core antenna
Speakers:	30 mm x 70 mm square speaker, 2 pcs.
Jacks:	[MIC] jack 3.5 mm stereo x 1 [PHONES] jack x 1
Power Supply:	DC 6V IEC R6 [AA] size x 4 External power source supplied to the [DC IN 6V] jack (5.0 mm dia. center contact positive)
Output Power:	450 mW x 2, 10% distortion
Dimensions:	196.5(W) x 103(H) x 38.5(D) mm
Weight:	515 g (without batteries)

Specifications are subject to change without notice.

PRINTED IN JAPAN 22905279 Mar. 1984 Ⓢ TA, YY

105

CONTENTS

1. BLOCK DIAGRAM 2
2. OPERATING CONTROLS 3
3. DISASSEMBLY INSTRUCTIONS . . . . . 4 to 5
4. DIAL CORD RESTRINGING 6
5. CHIP PARTS REPLACEMENT 6
6. ALIGNMENTS INSTRUCTIONS . . . . . 7 to 10
7. ELECTRICAL PARTS LOCATIONS 11
8. SCHEMATIC DIAGRAM 12
9-1. EXPLODED VIEW MECHANISM (UPPER) 13
9-2. EXPLODED VIEW MECHANISM (LOWER) 14
10. MECHANISM PARTS LIST 15
11. EXPLODED VIEW CABINET 16
12. CABINET PARTS LIST 17
13. ELECTRICAL PARTS LIST . . . . . 18 to 20

1. BLOCK DIAGRAM

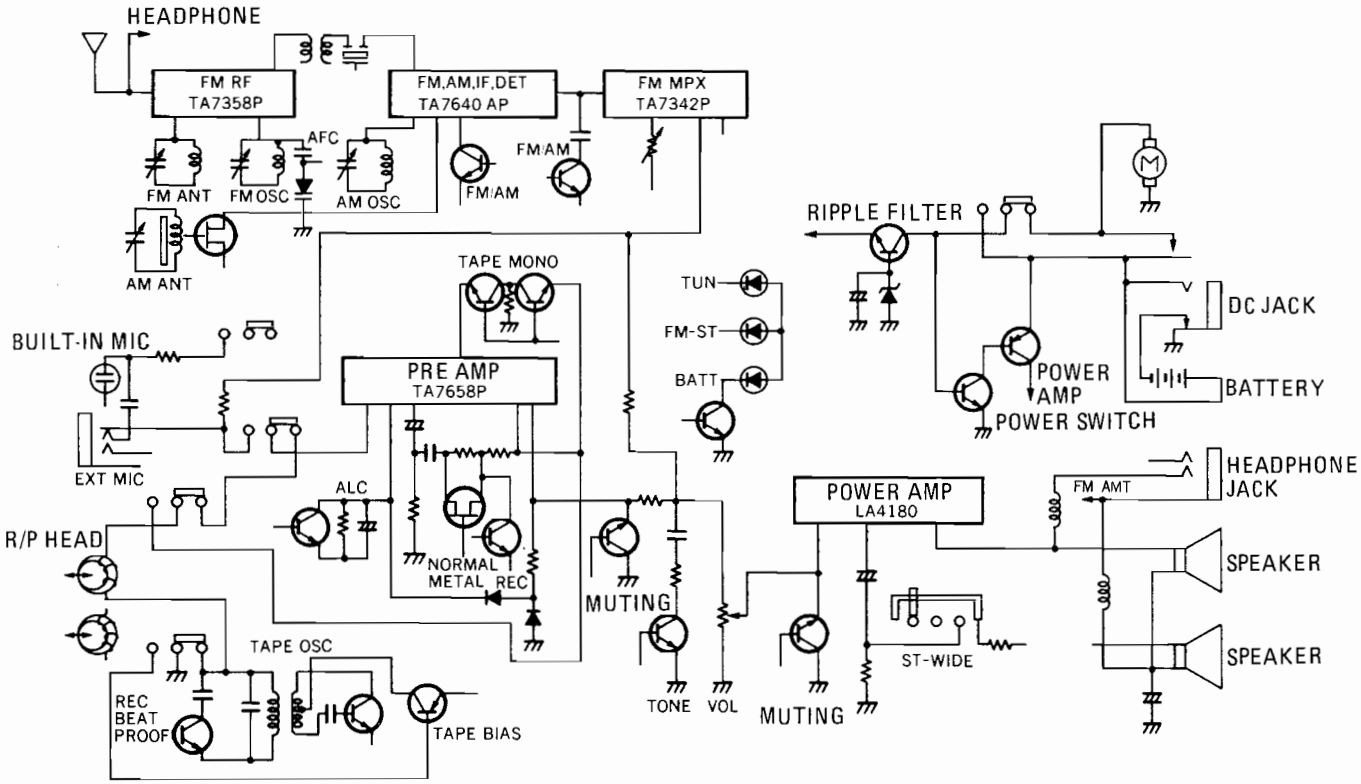

2. OPERATING CONTROLS

[PLAY] Button
[TAPE] Selector
[REC] Button
[FUNCTION] Switch
[BAND] Selector
Built-in Microphone
[BATT] Indicator
[FM-ST] Indicator
[TUN] Indicator
Speaker
[REW/REVIEW] Button
Telescopic Antenna
[FF/CUE] Button
[STOP/EJECT] Button
[PAUSE] Button
[TUNING] Knob
Built-in Microphone
Tape Counter and Reset Button
Speaker

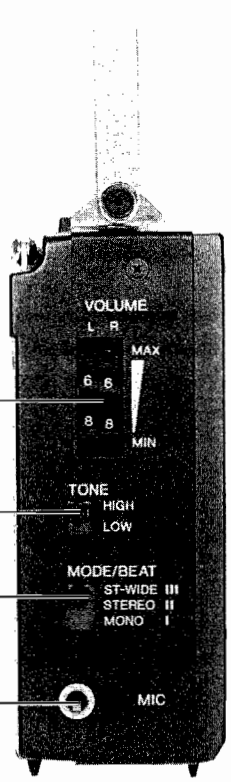

[VOLUME] Control
[TONE] Switch
[MODE/BEAT] Switch
[MIC] Jack

[PHONES] Jack
[DC IN 6V] Jack

3. DISASSEMBLY INSTRUCTIONS

FRONT CABINET REMOVAL

1. Remove four screws Ⓐ & Ⓑ from back cabinet and three screws Ⓒ & Ⓓ from the bottom side.
2. Remove two screws Ⓔ securing handles at both sides, and the handles will be removed.
3. Open cassette holder with EJECT button pushed, and front cabinet will be removed.

Caution: Cassette button panel and selection switch knobs will be removed with the front cabinet removed. Be careful not to miss them.

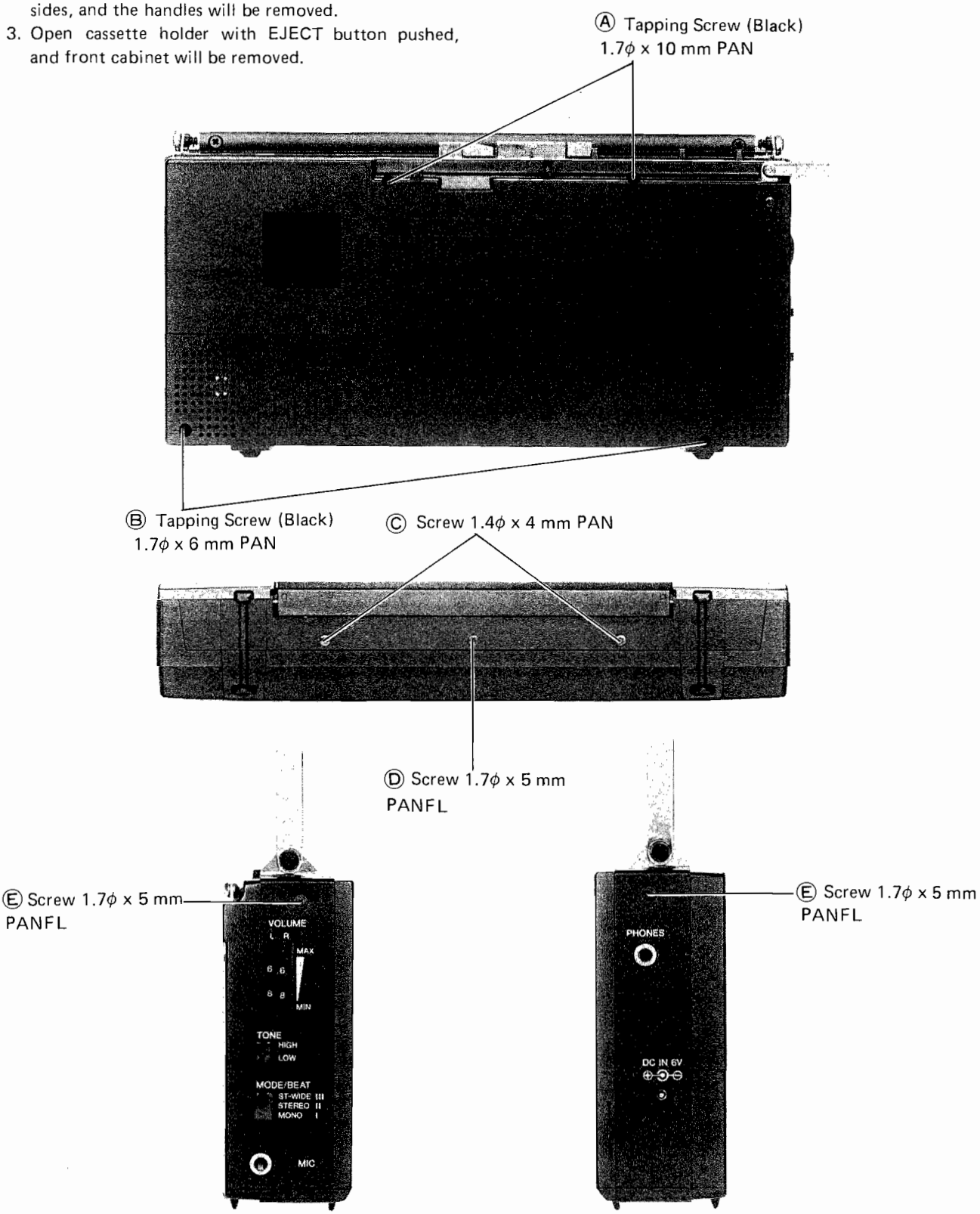

REMOVAL OF MECHANISM ASSEMBLY AND MAIN P.C. BOARD

1. Remove one screw Ⓕ securing dial frame and back cabinet, and the mechanism assembly and the main P.C. Board will be removed.

Note: When removing mechanism assembly and main P.C. Board, remove their right sides first from back cabinet, and they can be removed smoothly.

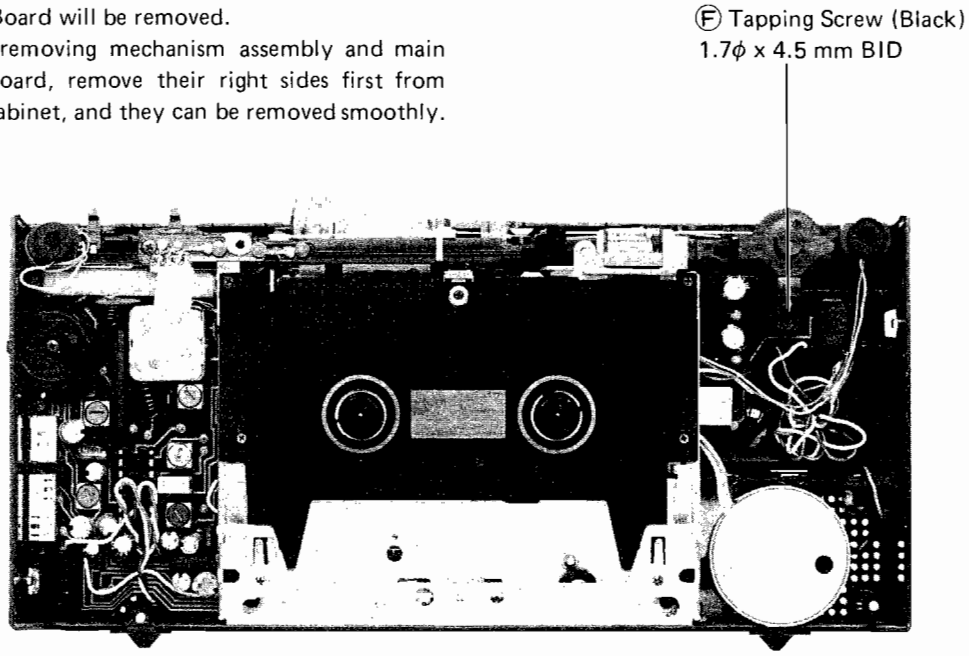

REMOVAL OF P.C. BOARD AND MECHANISM ASSEMBLY

Remove two screws, head lead, and leaf switch leads, and then mechanism assembly will be removed from P.C. Board.

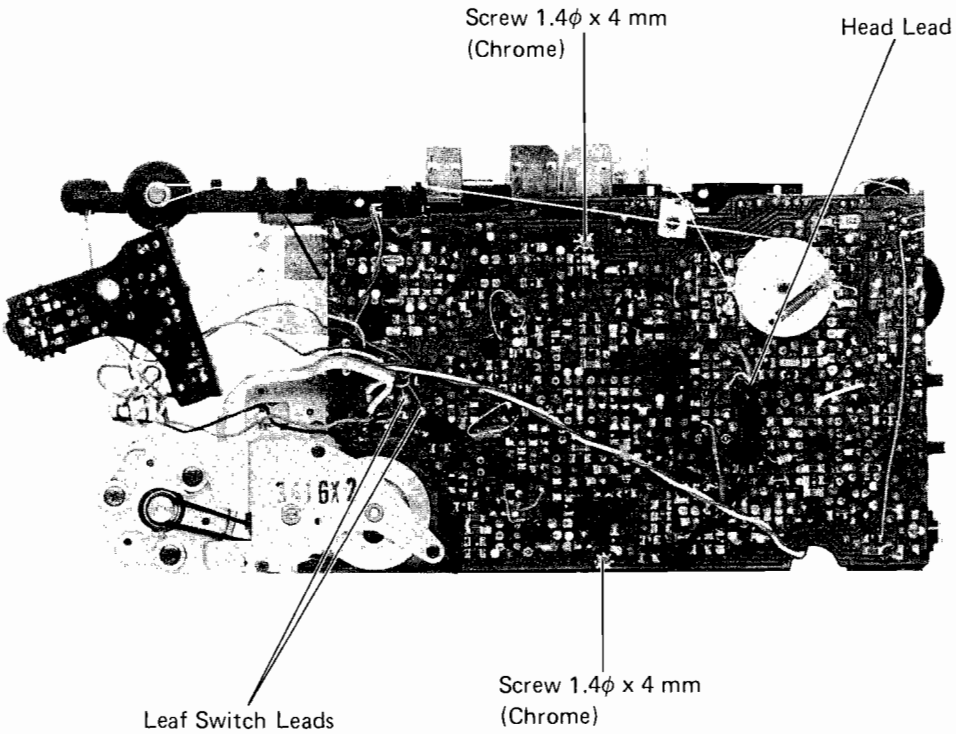

4. DIAL CORD RESTRINGING

DIAL CORD RESTRINGING

1. Tie dial cord to dial spring.
2. Pull out dial cord through the hole of drum. (Don't hook spring on drum.)
3. Turn tuning capacitor shaft fully clockwise.
4. Fix drum to tuning capacitor shaft with setting screw.
5. Proceed stringing in steps ① to ⑫ .
6. Hook spring on dial drum.
7. Install pointer. Move pointer to "0" on dial plate.

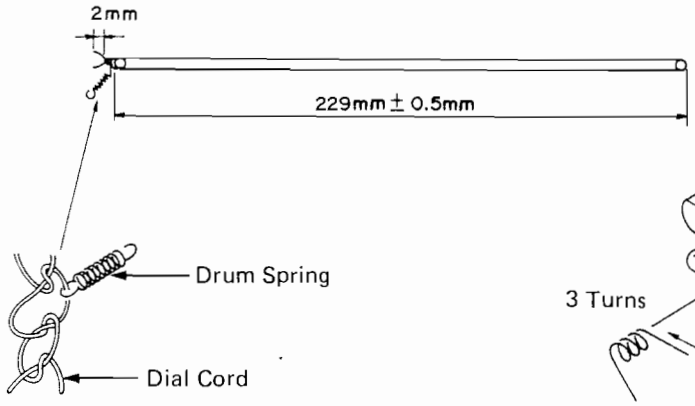

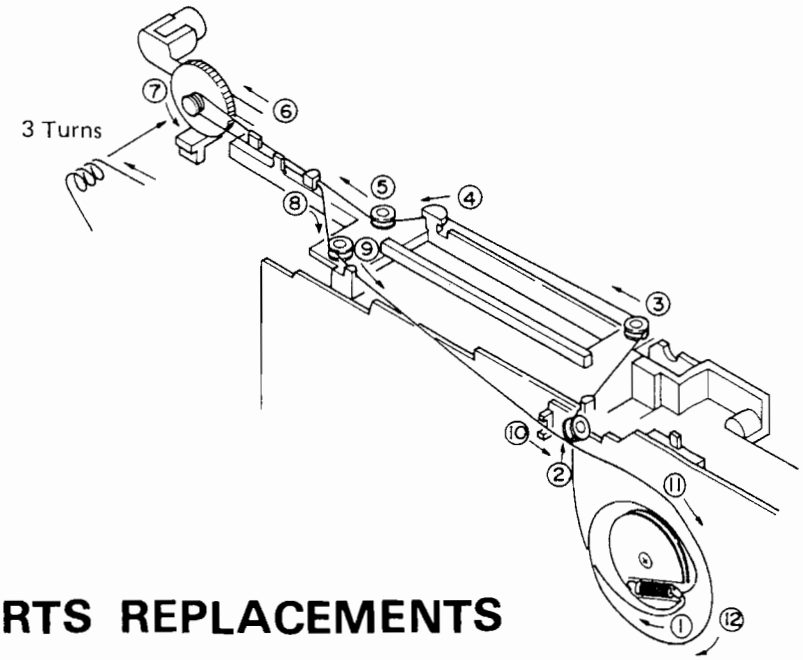

5. CHIP PARTS REPLACEMENTS

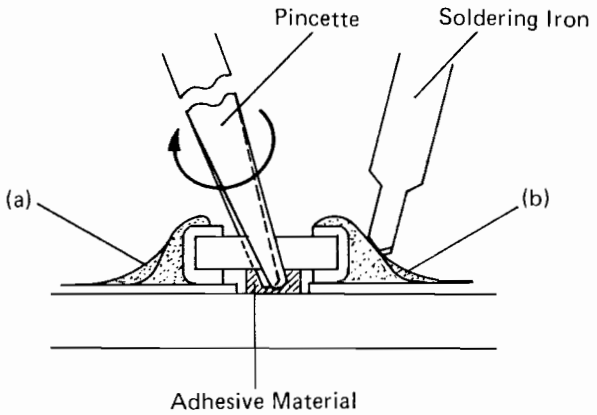

Unsoldering ICs and Other Semiconductor Chips

1. Hold the part as its center with pincette, etc. and apply heat at soldered section (a) and (b) alternatively with soldering iron tip. Remove the part by moving it to left and right while the solder does not harden.
2. Cut or broken the part at it center with a diagonal cutter and remove by unsoldering each terminal of the part.

Note: Parts removed by the method 2 above can not be reused. Transistors removed by the method 1 above amy be reused if they are removed carefully with less heat applied.

6. ALIGNMENTS INSTRUCTIONS

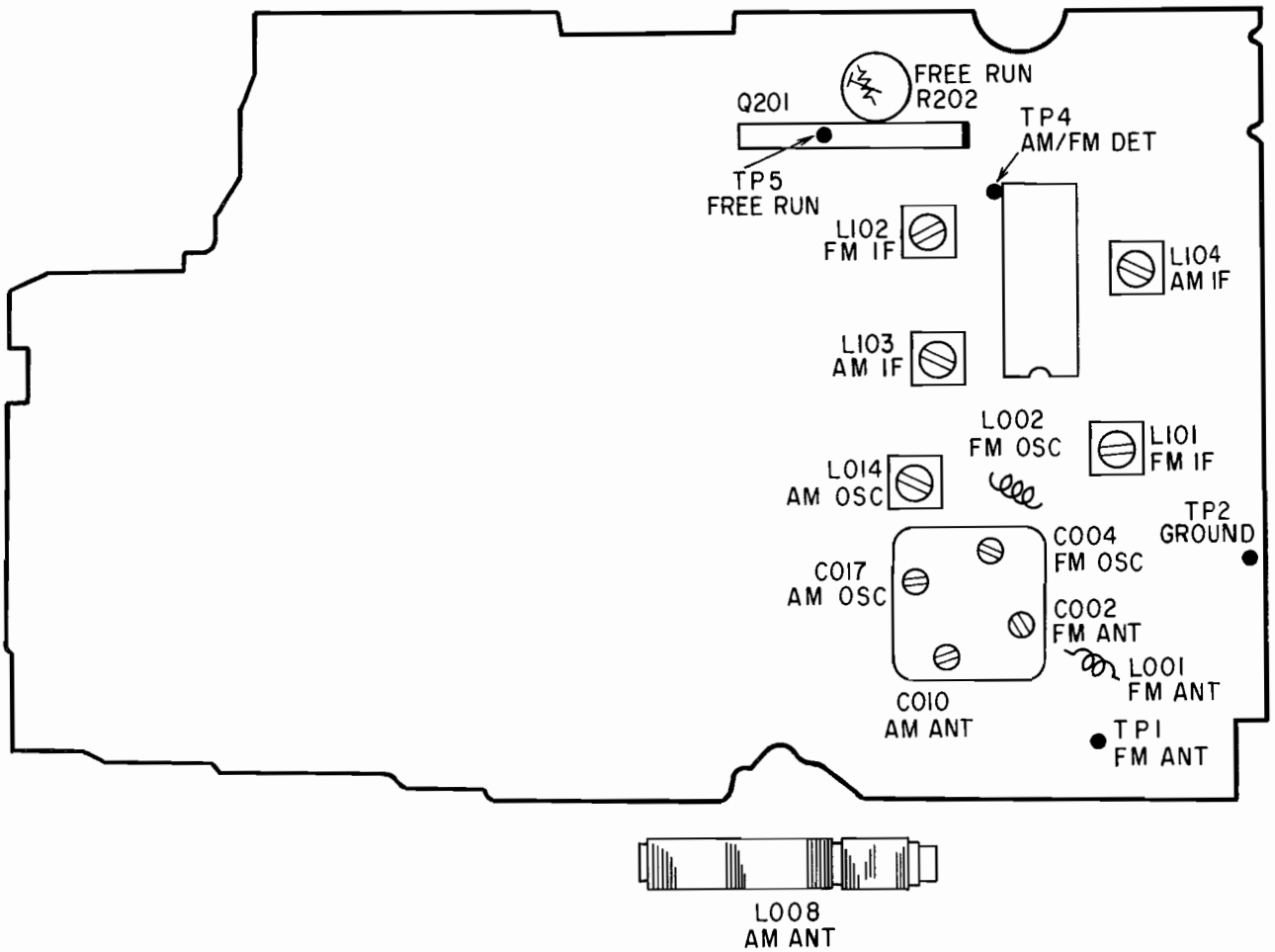

TEST EQUIPMENT

1. Signal generator with a frequency range of at least from 400 kHz to 1700 kHz AM.
2. Oscilloscope with a side range amplifier of approximately 100 kHz.
3. Test loop – a coil of any size wire, one turn or more. (AM)
4. VTVM.

AM ALIGNMENT

1. Turn on the AM signal generator and the VTVM allowing a fifteen-minute warm-up period.
2. Using the test loop across the output of the signal generator, inductively connect the signal generator to the radio.
3. Connect the VTVM across the voice coil or a 3.2 ohm dummy load.
4. Set signal generator frequency as listed in ALIGNMENT CHART and maintain a sufficient output level to provide an indication on VTVM.
5. Set volume control at mid-position.
6. Proceed as outlined in the IF-AM ALIGNMENT CHART.

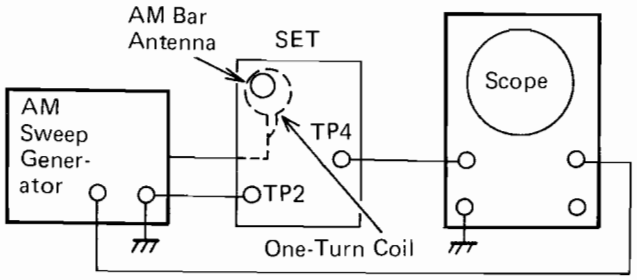

AM 455 kHz (TA)
AM 460 kHz (YY)

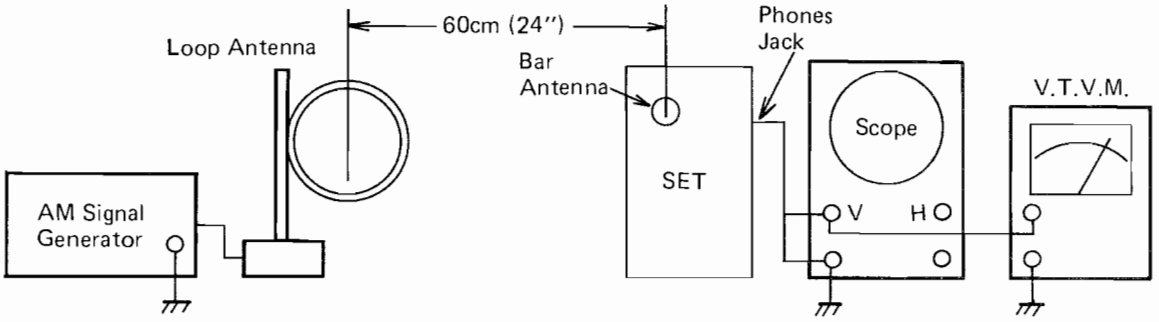

AM ALIGNMENT CHART

Band	Step	Signal Generator Frequency	Radio Dial Setting	Adjustment	Remarks
IF	1	455 kHz (TA) 460 kHz (YY)	Tuning Gang Fully Counter-clockwise (Lowest Frequency)	L103 L104	Adjust for maximum indication.
AM	2	510 kHz	Tuning Gang Fully Counter-clockwise (Lowest Frequency)	OSC. Coil L014	Adjust for maximum indication.
	3	1650 kHz	Tuning Gang Fully clockwise (Highest Frequency)	OSC. Trim C017	Adjust for maximum indication.
	4	Repeat steps 2 and 3 as required.			
	5	600 kHz	Tune to Signal.	Ant. Coil L008	Adjust for maximum indication.
	6	1400 kHz	Tune to Signal.	Ant. Trim C010	Adjust for maximum indication.
	7	Repeat steps 5 and 6 as required.			

FM-IF ALIGNMENT

1. Set the select switch to FM position.
2. Turn on both sweep generator and oscilloscope, and allow a fifteen-minute warm-up period.
3. Connect the RF SWEEP SIGNAL OUTPUT from the signal generator through the loop antenna to the receiver.
4. Connect the oscilloscope vertical input directly to the test point TURN OUT H and connect the shielded lead to the test point E or chassis ground.
5. Connect the SWEEP VOLTAGE OUTPUT of the sweep generator to the oscilloscope.
6. Proceed as outlined in the FM-IF ALIGNMENT CHART.

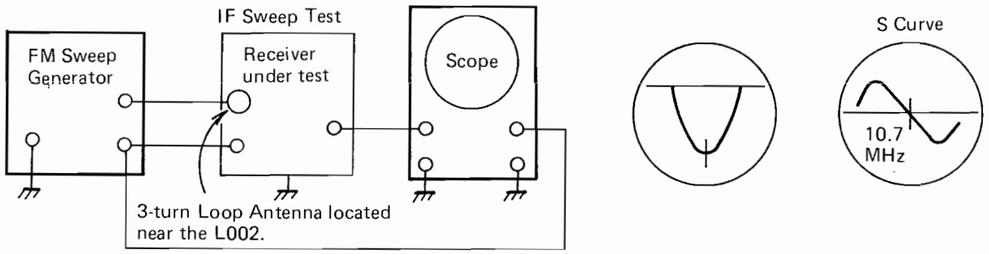

FM-IF ALIGNMENT CHART

Step	Signal coupling	Equip.	Tuning	Connection	Adjust. point	Pattern
1	Connect sweep generator output to a three-turn loop antenna of 10cm diameter.	Sweep generator of 10.7 MHz center freq. with 10.7 MHz marker.	Tuning Knob fully counter-clockwise (Lowest Frequency.)	Set scope for connecting output signal from TUN OUT to vertical axis of scope "V" and sweep generator output to horizontal axis "H".	L101 L102	Turn the IF Transformer L102 fully counterclockwise to obtain a single peak. Adjust coil L101 in order until the best single peak is obtained. Figure 18. Finally turn the coil L102 to obtain S curve. See Figure 19.

FM-RF ALIGNMENT

1. Turn on the signal generator and the VTVM, and allow a fifteen-minute warm-up period.
2. Connect the signal generator output through a 75 ohm dummy antenna across FM ANT.
3. Connect the VTVM across the voice coil or a 3.2 ohm dummy load.
4. Set the volume control to mid-position.
5. Adjust the signal generator frequency as indicated in FM-RF ALIGNMENT CHART, and maintain a sufficient signal output level to provide a measurable indication.
6. Proceed as outlined in the FM-RF ALIGNMENT CHART.

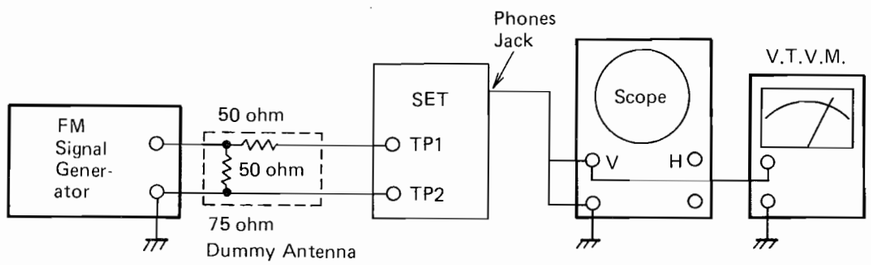

FM-RF ALIGNMENT CHART

Step	Signal Generator	Radio Dial Setting	Adjustment	Remarks
1	87.5 MHz	Tuning Knob fully Counterclockwise (Lowest Frequency)	OSC. Coil L002	Adjust for maximum output indication.
2	108 MHz	Tuning Knob fully Clockwise (Highest Frequency)	OSC. Trim. C004	Adjust for maximum output indication.
3	Repeat steps 1 and 2 as required.			
4	90 MHz	Tune to signal	Ant. Coil L001	Adjust for maximum output indication.
5	106 MHz		Ant. Trim. C002	
6	Repeat steps 4 and 5 as required.			

FREE RUN FREQUENCY ALIGNMENT

Adjust R202 under no signal condition so as to obtain 76 kHz ±150 Hz.

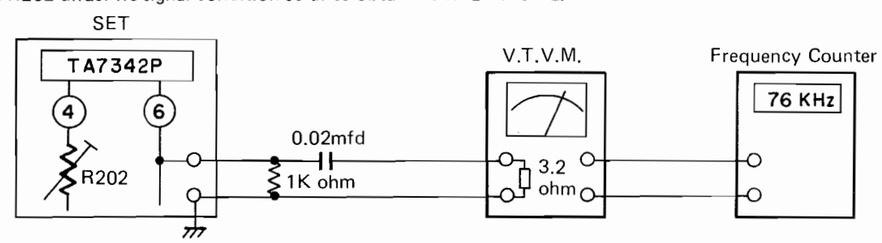

CAUTION:

When realigning the FM Receiving Frequency, the highest end of the frequency range should not be more than 108 MHz and the lowest end of the frequency range should not be less than 87.5 MHz, in order to comply with FTZ regulations in West Germany.

RECORD/PLAYBACK HEAD ADJUSTMENT

A 6.3 kHz test tape must be used for this adjustment.

Connect a VTVM or an oscilloscope to the headphones jack or speaker terminal and adjust the azimuth by using a phillips screwdriver to maintain the maximum output voltage.

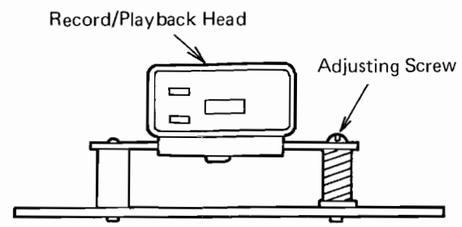

Record/Playback Head Adjustment

TAKE-UP/SUPPLY REEL TENSION

1. Insert cassette torque meter (HARTAK X-87 Torquette)
2. Press PLAY button and read torque meter. Torque should be 30 to 60 gcm.
3. Release PLAY button and press REWIND button. Torque should be 65 to 125gcm. If necessary, clean take-up reel or drive belt with alcohol, or replace belt.

7. ELECTRICAL PARTS LOCATIONS

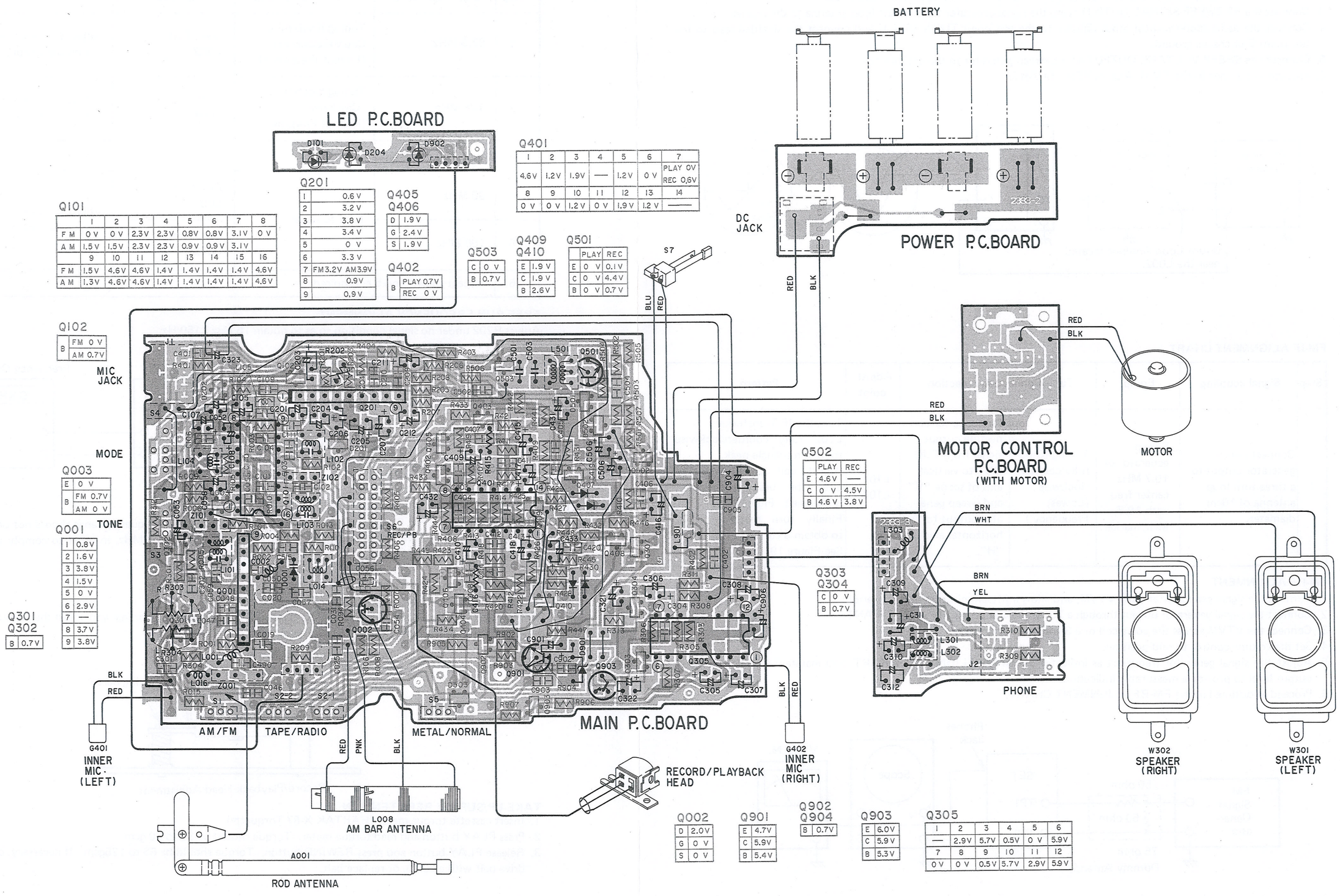

Q101

	1	2	3	4	5	6	7	8
FM	0 V	0 V	2.3V	2.3V	0.8V	0.8V	3.1V	0 V
AM	1.5 V	1.5 V	2.3 V	2.3 V	0.9 V	0.9 V	3.1 V	
	9	10	11	12	13	14	15	16
FM	1.5 V	4.6 V	4.6 V	1.4 V	1.4 V	1.4 V	1.4 V	4.6 V
AM	1.3 V	4.6 V	4.6 V	1.4 V	1.4 V	1.4 V	1.4 V	4.6 V

Q201

1	0.6 V
2	3.2 V
3	3.8 V
4	3.4 V
5	0 V
6	3.3 V
7	FM3.2V AM3.9V
8	0.9V
9	0.9 V

Q405
Q406

D	1.9 V
G	2.4 V
S	1.9 V

Q402

B	PLAY 0.7V
	REC 0 V

Q401

1	2	3	4	5	6	7
4.6V	1.2V	1.9V	—	1.2V	0 V	PLAY 0V REC 0.6V
8	9	10	11	12	13	14
0 V	0 V	1.2 V	0 V	1.9 V	1.2 V	—

Q503

C	0 V
B	0.7 V

Q409
Q410

E	1.9 V
C	1.9 V
B	2.6 V

Q501

	PLAY	REC
E	0 V	0.1 V
C	0 V	4.4 V
B	0 V	0.7 V

Q102

B	FM 0 V
	AM 0.7V

Q003

E	0 V
B	FM 0.7V
	AM 0 V

Q001

1	0.8V
2	1.6 V
3	3.8 V
4	1.5 V
5	0 V
6	2.9 V
7	—
8	3.7 V
9	3.8 V

Q301
Q302

B	0.7 V

Q502

	PLAY	REC
E	4.6 V	—
C	0 V	4.5 V
B	4.6 V	3.8 V

Q303
Q304

C	0 V
B	0.7 V

Q002

D	2.0 V
G	0 V
S	0 V

Q901

E	4.7V
C	5.9V
B	5.4V

Q902
Q904

B	0.7V

Q903

E	6.0V
C	5.9 V
B	5.3 V

Q305

1	2	3	4	5	6
—	2.9V	5.7V	0.5V	0 V	5.9V
7	8	9	10	11	12
0 V	0 V	0.5 V	5.7V	2.9V	5.9 V

8. SCHEMATIC DIAGRAM

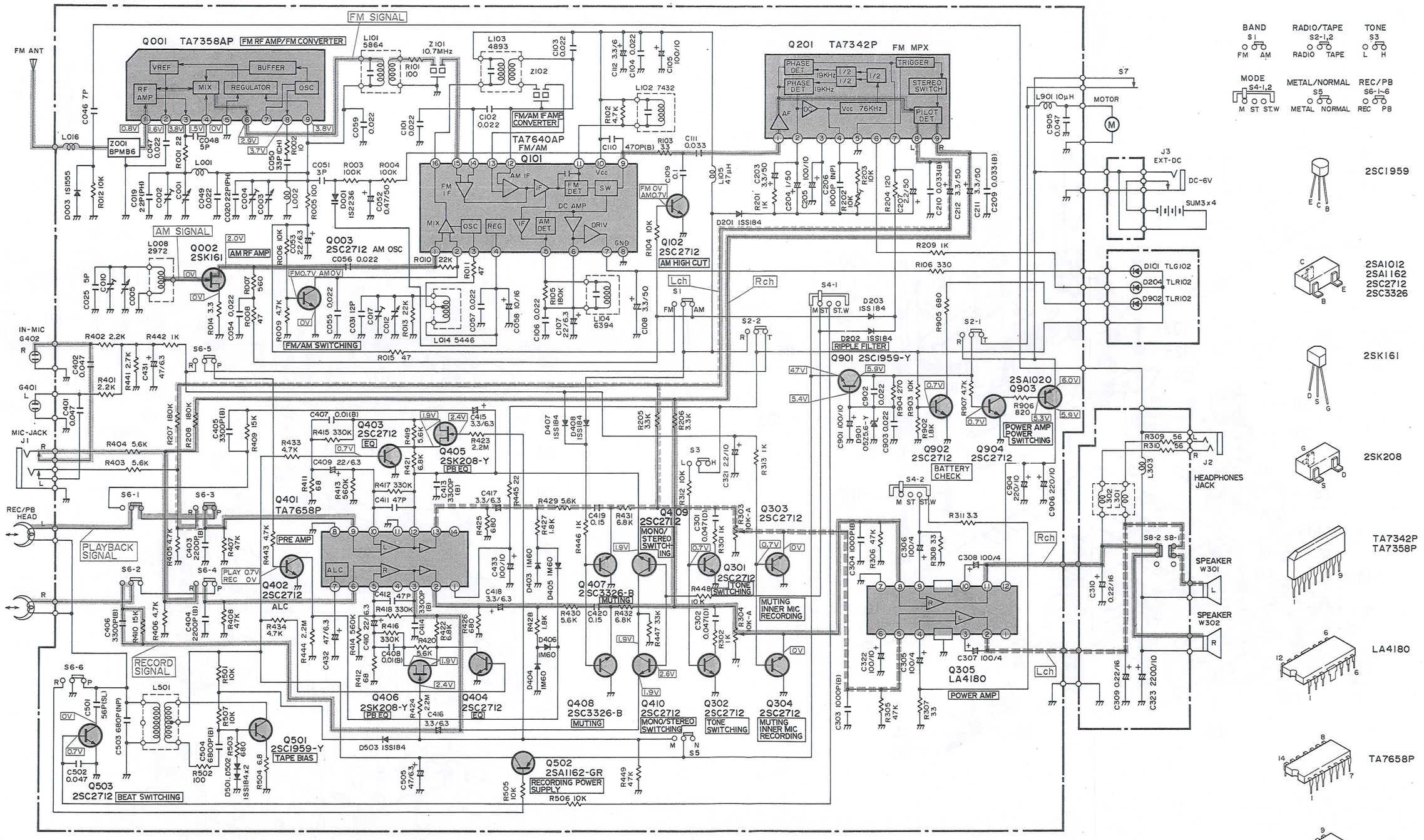

Q501

	E	C	B
PLAY	0V	0V	0V
REC	0.1V	4.4V	0.7V

Q502

	E	C	B
PLAY	4.6V	0V	4.6V
REC		4.5V	3.8V

Q401

1	2	3	4	5	6	7
4.6V	1.2V	1.9V	—	1.2V	0V	Play 0V Rec 0.6V
8	9	10	11	12	13	14
0V	0V	1.2V	0V	1.9V	1.2V	—

Q101

	1	2	3	4	5	6	7	8
FM	0V	0V	2.3V	2.3V	0.8V	0.8V	3.1V	0V
AM	1.5V	1.5V	2.3V	2.3V	0.9V	0.9V	3.1V	—
	9	10	11	12	13	14	15	16
FM	1.5V	4.6V	4.6V	1.4V	1.4V	1.4V	1.4V	4.6V
AM	1.3V	4.6V	4.6V	1.4V	1.4V	1.4V	1.4V	4.6V

Q201

1	2	3	4	5	6	7	8	9
0.6V	3.2V	3.8V	3.4V	0V	3.3V	FM 3.2V AM 3.9V	0.9V	0.9V

Q305

1	2	3	4	5	6
—	2.9V	5.7V	0.5V	0V	5.9V
7	8	9	10	11	12
0V	0V	0.5V	5.7V	2.9V	5.9V

9-1. EXPLODED VIEW MECHANISM (UPPER)

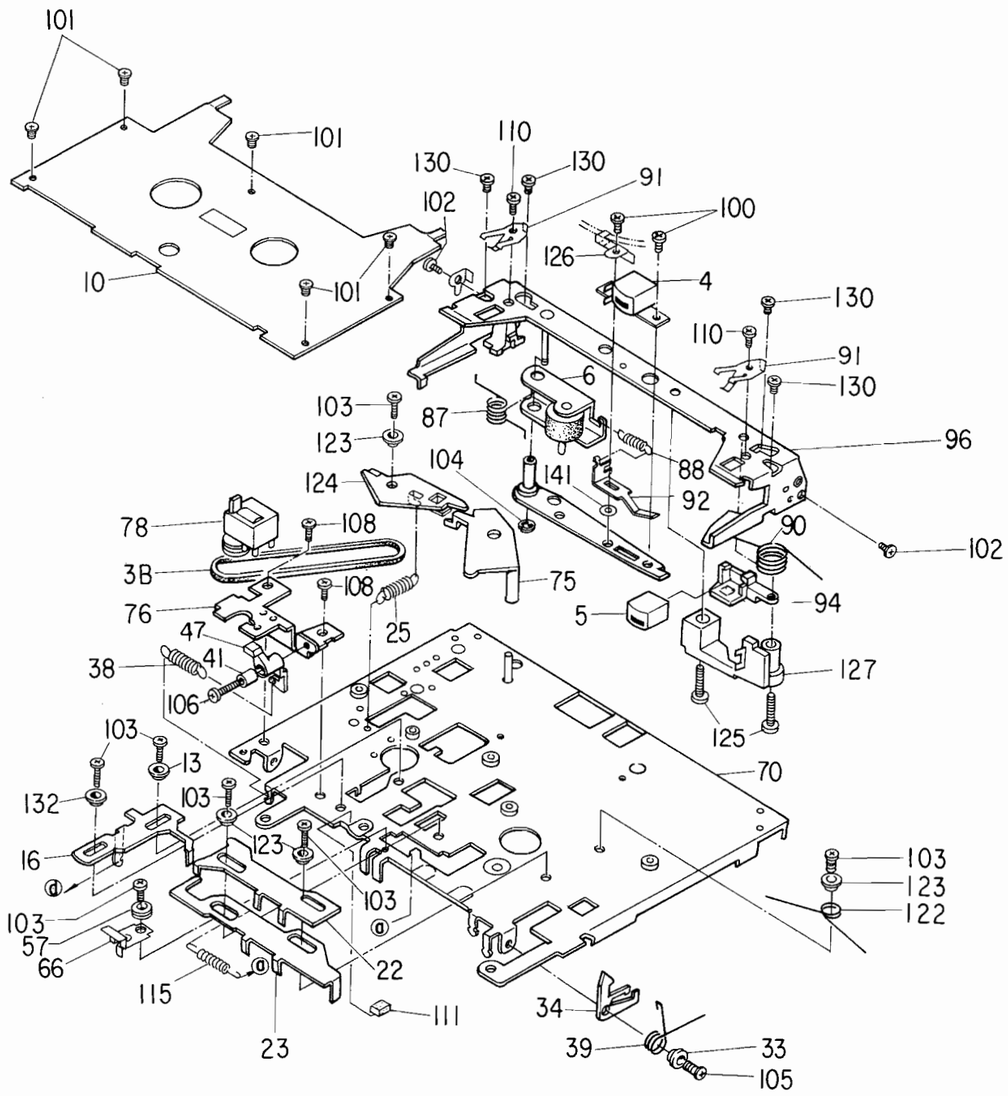

NOTE: Parts excluded in the parts list are not stocked since they are seldom required for routine service. Some delay should be anticipated when ordering they items.

9-2. EXPLODED VIEW MECHANISM (LOWER)

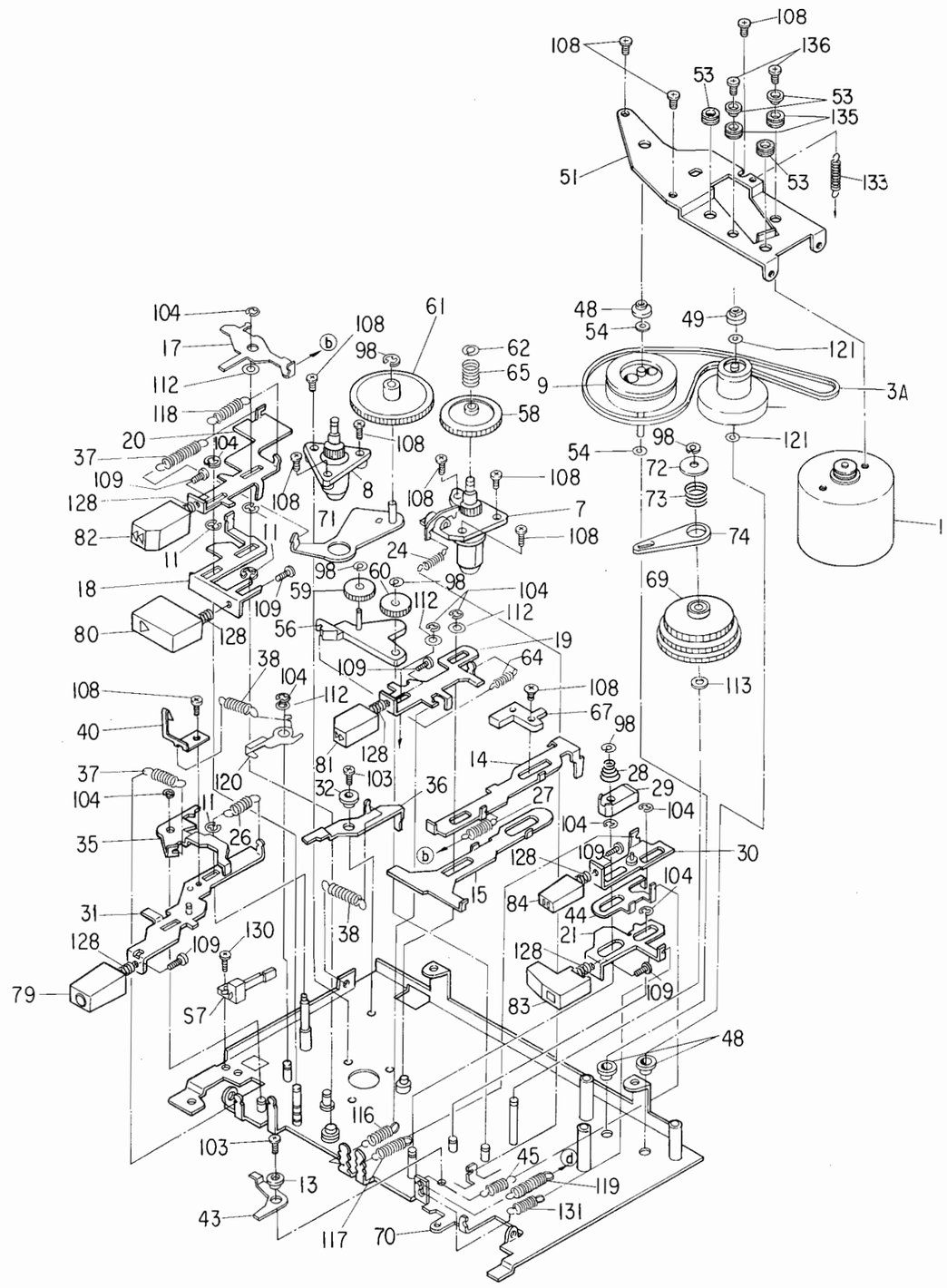

NOTE: Parts excluded in the parts list are not stocked since they are seldom required for routine service. Some delay should be anticipated when ordering they items.

10. MECHANISM PARTS LIST

Symbol No.	Part No.	Description
1	22125851	Motor Ass'y with P.C. Board and Pulley
3A	25755594	Belt, Drive
3B	25755575	Belt, Counter
4	22217425	Head, Record/Playback
5	22218268	Head, Erase
6	25717576	Pressure Roller
7	25712435	Reel Plate Ass'y, Right
8	25712434	Reel Plate Ass'y, Left
9	25717588	Flywheel Ass'y
10	25734504	Cover, Mechanism
11	22703118	Retaining Ring, 2mmd
13	25726655	Boss, Stop Lever
17	25748959	Lever, Play
18	25749002	Operaiton Plate, Play
19	25749003	Operation Plate, FF
20	25749004	Operation Plate, REW
21	25749005	Operation Plate, Stop
22	25749007	Lock Slider
24	25776472	Spring
25	25776574	Spring
26	25776576	Spring
27	25776578	Spring
28	25777239	Spring
29	25784056	Lever, Pause Lock
30	25791647	Operaiton Plate Ass'y, Pause
31	25791575	Operation Plate Ass'y, REC
32	25724914	Bushing
33	25724916	Bushing
34	25747165	Lever, Record Stop
35	25748954	Lever, Record Lock
37	25776573	Spring
38	25776577	Spring
39	25778107	Spring
40	25779331	Spring
41	25724913	Boss
43	25748955	Lever, Eject
44	25748958	Lever, Select Up
45	25776575	Spring
47	25784057	Lever, Cassette Lock
48	25725457	Holder
49	25725458	Holder
50	25726661	Spacer, Motor
53	25761480	Cushion, Motor
54	25766082	Washer
55	25717589	Sub Wheel Ass'y
56	25791629	High Speed Gear Shaft Ass'y
57	25726654	Boss
58	25756355	Play Gear
59	25756356	FF Drive Gear
60	25756357	FF Gear
61	25756366	Rewind Gear
62	25766079	Washer
64	25776598	Spring
65	25777238	Spring
66	25779394	Spring Holder
67	25783327	Guide Pin, Cassette
69	25713571	Take-up Gear Ass'y
71	25791577	Take-up Lever Ass'y
72	25754442	Washer

Symbol No.	Part No.	Description
73	25777266	Spring
74	25784058	Lever
75	25784059	Lever, ASO
76	25737082	Mtg. Plate, Counter
78	25873276	Tape Counter
79	25783331	Button, Record
80	25783332	Button, Play
81	25783333	Button, FF
82	25783334	Button, Rewind
83	25783335	Button, Stop
84	25783336	Button, Pause
87	25775239	Spring
88	25776474	Spring
90	25778106	Spring
91	25779335	Spring
95	25791578	Head Lever Ass'y
96	25791579	Cassette Holder Ass'y
98	25766050	Wasehr, 1.6mmd
100	22701467	Screw, BID Hd. 2d x 3mml
101	22707678	Screw, FLT Hd. 1.4d x 1.6mml
102	22707831	Screw, PAN Hd. 1.7d x 2.5mml
103	22707496	Screw, PAN Hd 1.4d x 2.5mml
104	22703117	Retaining Ring, 1.5mmd
105	22707594	Screw, BID Hd. 1.4d x 5mml
106	22707507	Screw, BID Hd. 2d x 8mml
108	22707832	Screw, PAN Hd. 1.4d x 2.5mml
109	22707651	Screw, PAN Hd. 1.7d x 4mml
110	22707830	Screw, PAN Hd. 1.7d x 1.6mml
112	25735239	Washer
113	25766042	Washer
115	25776581	Spring
116	25776584	Spring
117	25776585	Spring
118	25776596	Spring
119	25776605	Spring
120	25748969	Lever
121	25766135	Washer, 4mmd
122	25778121	Spring
123	25724915	Bushing
124	25784061	Lever, Detect Open
125	22707322	Screw, BID Hd. 2d x 10mml
130	22707978	Screw, PAN Hd. 1.7d x 2.5mml
131	25776611	Spring
132	25726696	Boss

11. EXPLODED VIEW CABINET

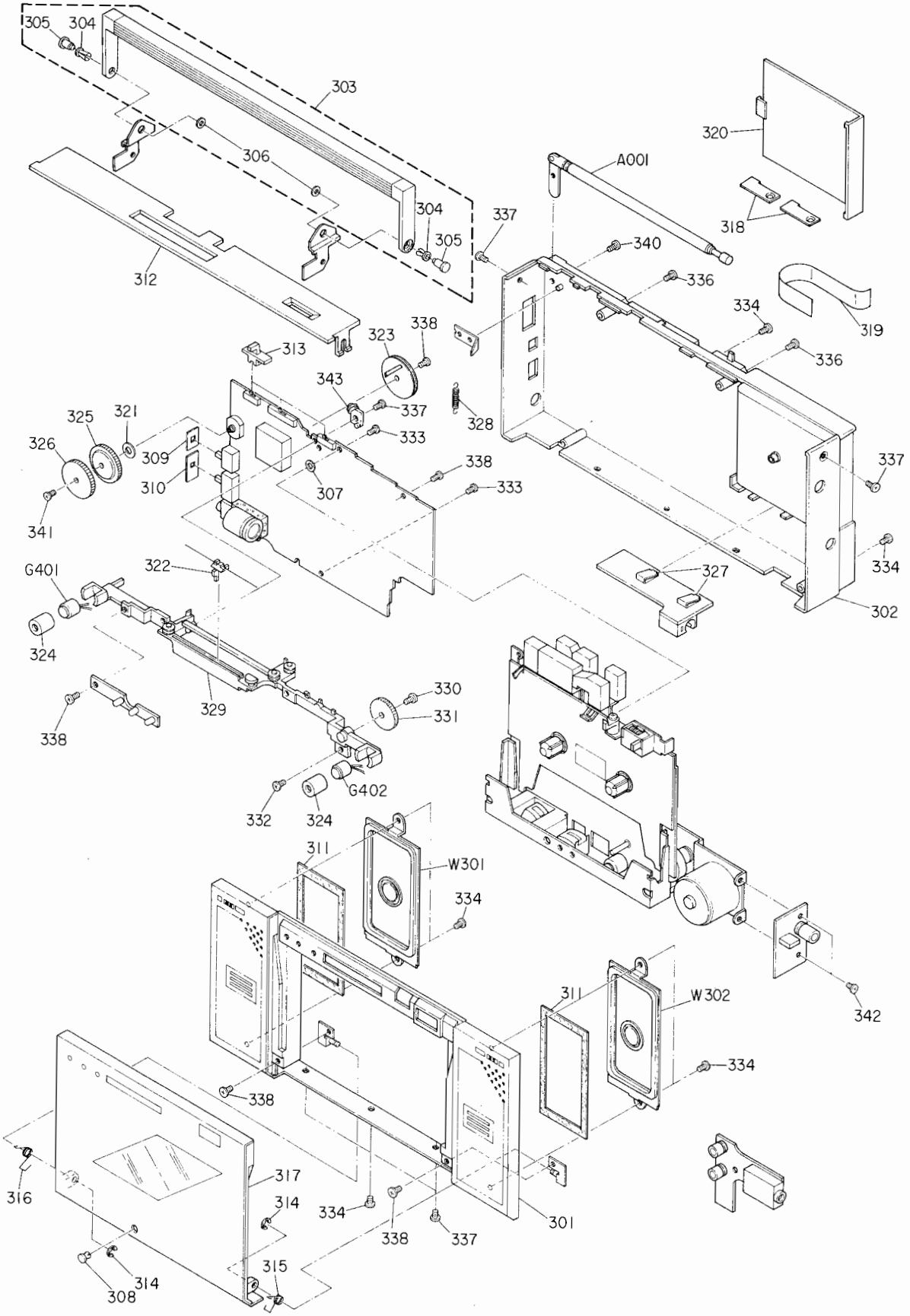

NOTE: Parts excluded in the parts list are not stocked since they are seldom required for routine service. Some delay should be anticipated when ordering they items.

12. CABINET PARTS LIST

Symbol No.	Part No.	Description
301	25883311	Front Cabinet Ass'y
302	25883313	Back Cabinet Ass'y
303	25815265	Handle Ass'y
304	25835542	Washer, Handle
305	25835538	Shaft, Handle
306	25835549	Stoper, Handle
307	25766067	Washer
309	25857087	Cover, Switch
310	25857212	Cover, Switch
311	25857215	Cushion
312	25882707	Top Decoration
313	25886084	Slide Knob
314	22703117	Retaining Ring, 1.5mmd
315	25778144	Spring, Left, Cassette Open
316	25778145	Spring, Right, Cassette Open
317	25883312	Cassette Cover Ass'y
318	25779123	Contact, Battery
319	25833327	Battery Ribbon
320	25882486	Battery Cover
321	20748104	Spacer, Volume
322	22741441	Pointer
323	22742267	Dial Drum
324	25857207	Cushion, Microphone
325	25886085	Knob, Volume, Left
326	25886086	Knob, Volume, Right
327	25839330	Battery Spring
328	25776333	Spring, Dial Drum
329	22718186	Tuner Frame Ass'y
330	22743305	Tuning Shaft
331	25886048	Knob, Turning
332	22707638	Screw, BID Hd. 1.7d x 4.5mml
333	22707697	Screw, PAN Hd. 1.4d x 4mml
334	22707751	Screw, PAN Hd. 1.7d x 6mml
335	22708082	Screw, PAN Hd. 1.4d x 4mml
336	22708094	Screw, PAN Hd. 1.7d x 10mml
337	22708095	Screw, PAN Hd. 1.7d x 5mml
338	22707615	Screw, PAN Hd. 1.7d x 3mml
340	22707278	Screw, BID Hd. 2d x 3mml
341	22707614	Screw, PAN Hd. 1.4d x 4mml
343	22749347	Pulley Holder Ass'y

Symbol No.	Part No.	Description

13. ELECTRICAL PARTS LIST

Symbol No.	Part No.	Description
TRANSISTORS, ICS & DIODES		
Q001	B0325502	IC, TA7358AP
Q002	A6042630	Transistor, 2SK161-Y
Q003	A6335480	Transistor, 2SC2172-GR
Q101	A0356385	IC, TA7640AP
Q102	A6335480	Transistor, 2SC2712-GR
Q201	B0325330	IC, TA7342P
Q301	A6335480	Transistor, 2SC2712-GR
Q304	A6335480	Transistor, 2SC2712-GR
Q305	22117129	IC, LA4180
Q401	B0356580	IC, TA7658P
Q402	A6335480	Transistor, 2SC2712-GR
Q404	A6335480	Transistor, 2SC2712-GR
Q405, 406	A6043240	Transistor, 2SK208-Y
Q407, 408	A6359870	Transistor, 2SC3326-B
Q409, 410	A6335480	Transistor, 2SC2712-GR
Q501	A6319300	Transistor, 2SC1959NEW-Y
Q502	A6541142	Transistor, 2SA1162-GR
Q503	A6335480	Transistor, 2SC2712-GR
Q901	A6319300	Transistor, 2SC1959NEW-Y
Q903	A6534125	Transistor, 2SA1020-Y
D001	A7289000	Diode, 1S2236
D002	A7150650	Diode, 1SS184
D003	A7246703	Diode, 1S1555V
D101	A8605100	Diode, LED, TLG102
D201, 203	A7250650	Diode, 1SS184
D204	A8600050	Diode, LED, TLR102
D403	22115863	Diode, 1M60
D406	22115863	Diode, 1M60
D407, 408	A7150650	Diode, 1SS184
D501, 503	A7150650	Diode, 1SS184
D901	A7110017	Diode, Zener, 05Z5.6Y
D902	A8600050	Diode, LED, TLR102

Symbol No.	Part No.	Description
COILS & TRANSFORMERS		
L001	22294524	Coil, Antenna, FM
L002	22294467	Coil, Oscillator, FM
L008	22242972	Coil, Antenna, MW
L014	22245446	Coil, Oscillator, MW
L016	22292160	Coil, Loading
L101	22265864	IF Transformer, FM
L102	22267432	IF Transformer, FM
L103	22264893	IF Transformer, AM
L104	22266394	IF Transformer, AM
L105	22241072	Coil, Choke
L301, 302	22292153	Coil, Choke
L303	22292160	Coil, Loading
L501	22235235	Coil, Oscillator, Tape
L901	22291117	Coil, Choke
ELECTRICAL PARTS		
S1	22196307	Slide Switch, FM/AM
S2	22196308	Slide Switch, Radio/Tape
S3	22196035	Slide Switch, Tone
S4	22196309	Slide Switch, Mono/ST./ST.W
S5	22196307	Slide Switch, Metal/Normal
S6	22196313	Slide Switch, Record/Playback
S7	22196222	Leaf Switch, Motor
A001	22124802	Rod Antenna
W301, 302	22152501	Speaker, 70 x 30mm, Square Type
Z001	22153222	Filter, FM Bypass
Z101	22153249	Filter, Ceramic, FM
Z102	22153070	Filter, Ceramic, AM, TA
Z102	22153083	Filter, Ceramic, AM, YY
G401, 402	22154258	Built-in Microphone
J1	22163966	Jack, Ext. Microphone, 3.5mmd
J2	22198046	Jack, Headphone, 3.5mmd
J3	22163924	Jack, Ext. DC Power
EP01	22192439	P.C. Board, Jack

CAPACITORS

D = ±0.5pF, J = ±5%, K = ±10%, M = ±20%,
Z = −20 + 80%
ABBREVIATIONS: CD = Ceramic Disk, EL = Electrolytic, PF = Plastic Film, TT = Tantalum

Symbol No.	Part No.	Description
C001, 002, C003, 004, C005, 010, C012, 017	22308585	Variable Capacitor
C019	22350003	CD, 22pF, J, 50V, Chip
C020	22350003	CD, 22pF, J, 50V, Chip
C025	22351509	CD, 5pF, D, 50V, Chip
C031	22351120	CD, 12pF, K, 50V, Chip
C046	22351709	CD, 7pF, D, 50V, Chip
C047	22352223	CD, 0.022mfd, Z, 50V, Chip
C048	22351509	CD, 5pF, D, 50V, Chip
C049	22352223	CD, 0.022mfd, Z, 50V, Chip
C050	22355330	CD, 33pF, J, 50V, Chip
C051	22351309	CD, 3pF, D, 50V, Chip
C052	22440488	EL, 0.47mfd, 50V
C053	22440504	EL, 22mfd, 6.3V
C054	22352223	CD, 0.022mfd, Z, 50V, Chip
C056	22352223	CD, 0.022mfd, Z, 50V, Chip
C057	22352223	CD, 0.022mfd, Z, 50V, Chip
C058	22440497	EL, 10mfd, 16V
C059	22352223	CD, 0.022mfd, Z, 50V, Chip
C101, 102	22352223	CD, 0.022mfd, Z, 50V, Chip
C103, 104	22352223	CD, 0.022mfd, Z, 50V, Chip
C105	22440462	EL, 100mfd, 10V
C106	22352223	CD, 0.022mfd, Z, 50V
C107	22440504	EL, 22mfd, 6.3V
C108	22440491	EL, 3.3mfd, 50V
C109	22352104	CD, 0.1mfd, Z, 50V
C110	22353471	CD, 470pF, K, 50V, Chip
C111	22360330	PF, 0.033mfd, M, 25V
C112	22490071	TT, 3.3mfd, 6.3V
C203	22440491	EL, 3.3mfd, 50V
C204	22440489	EL, 1mfd, 50V
C205	22440462	EL, 100mfd, 10V
C206	22321314	PF, 1000pF, J, 50V
C207	22440490	EL, 2.2mfd, 50V
C209, 210	22353333	CD, 0.033mfd, M, 25V, Chip
C211, 212	22440491	EL, 3.3mfd, 50V
C301, 302	22354473	CD, 0.047mfd, M, 25V, Chip
C303, 304	22353102	CD, 1000pF, K, 50V, Chip
C305, 306	22440517	EL, 100mfd, 4V
C307, 308	22440517	EL, 100mfd, 4V
C309, 310	22490062	TT, 0.22mfd, 16V
C321	22490070	TT, 2.2mfd, 10V
C322	22483101	EL, 100mfd, 10V
C323	22440670	EL, 2200mfd, 10V
C401, 402	22352473	CD, 0.047mfd, Z, 25V, Chip
C403, 404	22353222	CD, 2200pF, K, 50V, Chip
C405, 406	22353332	CD, 3300pF, K, 50V, Chip
C407, 408	22353103	CD, 0.01mfd, K, 25V, Chip
C409, 410	22440504	EL, 22mfd, 6.3V
C411, 412	22351470	CD, 47pF, K, 50V, Chip
C413, 414	22353332	CD, 3300pF, K, 50V
C415, 416	22490071	TT, 3.3mfd, 6.3V
C417, 418	22490071	TT, 3.3mfd, 6.3V
C419, 420	22352154	CD, 0.15mfd, Z, 25V
C431, 432	22440506	EL, 47mfd, 6.3V
C501	22362560	CD, 56pF, K, 50V
C502	22352473	CD, 0.047mfd, Z, 25V, Chip
C503	22321325	PF, 680pF, J, 50V
C504	22353682	CD, 6800pF, K, 50V, Chip
C505	22490178	TT, 47mfd, 6.3V
C901	22483101	EL, 100mfd, 10V
C902, 903	22352223	CD, 0.022mfd, Z, 50V, Chip
C904	22440671	EL, 220mfd, 10V
C905	22352473	CD, 0.047mfd, Z, 25V, Chip
C906	22483101	EL, 220mfd, 10V

RESISTORS

Chip Resistors are Metal Oxide Resistor 1/8W, ±5%, unless otherwise noted.
K = 1000, M = 1000000

R001	22531220	22 ohm, Chip
R002	22531100	10 ohm, Chip
R003	22531104	100K ohm, Chip
R004	22531104	100K ohm, Chip
R005	22531101	100 ohm, Chip
R006	22531103	10K ohm, Chip
R007	22531561	560 ohm, Chip
R008	22531470	47 ohm, Chip
R009	22531472	4.7K ohm, Chip
R010	22531223	22K ohm, Chip
R011	22531470	47 ohm, Chip
R012	22531103	10K ohm, Chip
R013	22531223	22K ohm, Chip
R014	22531339	3.3 ohm, Chip
R015	22531470	47 ohm, Chip

Symbol No.	Part No.	Description
R101	22531101	100 ohm, Chip
R102	22531472	4.7K ohm, Chip
R103	22531339	3.3 ohm, Chip
R104	22531103	10K ohm, Chip
R105	22531184	180K ohm, Chip
R106	22531331	330 ohm, Chip
R201	22531102	1K ohm, Chip
R202	22658656	Semi-fixed Variable, 10K ohm, Free Run
R203	22531103	10K ohm, Chip
R204	22531121	120 ohm, Chip
R205, 206	22531332	3.3K ohm, Chip
R207, 208	22531184	180K ohm, Chip
R209	22531102	1K ohm, Chip
R301, 302	22531102	1K ohm, Chip
R303/304	22611410	Variable Resistor, 10K-A Volume
R307, 308	22531330	33 ohm, Chip
R309, 310	22531560	56 ohm, Chip
R311	22531339	3.3 ohm, Chip
R312	22531103	10K ohm, Chip
R313	22531102	1K ohm, Chip
R401, 402	22531222	2.2K ohm, Chip
R403, 404	22531562	5.6K ohm, Chip
R405, 406	22531472	4.7K ohm, Chip
R407, 408	22531473	47K ohm, Chip
R409, 410	22531153	15K ohm, Chip
R411, 412	22531680	68 ohm, Chip
R413, 414	22531564	560K ohm, Chip
R415, 416	22531334	330K ohm, Chip
R417, 418	22531334	330K ohm, Chip
R419, 420	22531562	5.6K ohm, Chip
R421, 422	22531682	6.8K ohm, Chip
R423, 424	22531225	2.2M ohm, Chip
R425, 426	22531681	680 ohm, Chip
R427, 428	22531182	1.8K ohm, Chip
R429, 430	22531562	5.6K ohm, Chip
R431, 432	22531682	6.8K ohm, Chip
R433, 434	22531472	4.7K ohm, Chip
R441	22531272	2.7K ohm, Chip
R442	22531102	1K ohm, Chip
R443	22531472	4.7K ohm, Chip
R444	22531225	2.2M ohm, Chip
R445	22531220	22 ohm, Chip
R446	22531102	1K ohm, Chip
R447	22531333	33K ohm, Chip
R448	22531203	10K ohm, Chip
R449	22531473	47K ohm, Chip

Symbol No.	Part No.	Description
R501	22531103	10K ohm, Chip
R502	22531101	100 ohm, Chip
R503	22531681	680 ohm, Chip
R504	22531689	6.8 ohm, Chip
R505	22531103	10K ohm, Chip
R506	22531103	10K ohm, Chip
R507	22531103	10K ohm, Chip
R902	22531182	1.8K ohm, Chip
R903	22531103	10K ohm, Chip
R904	22531271	270 ohm, Chip
R905	22531681	680 ohm, Chip
R906	22531821	820 ohm, Chip
R907	22531472	4.7K ohm, Chip

ACCESSORIES

AC01	22904012	Owner's Manual, YY
AC02	22904013	Owner's Manual, TA
AC03	22993060	Hand Strap

TOSHIBA CORPORATION
2-1, GINZA 5-CHOME, CHUO-KU, TOKYO 104, JAPAN